CURTIS E. LEMAY CENTER
FOR DOCTRINE DEVELOPMENT AND EDUCATION

ANNEX 4-0 COMBAT SUPPORT

CATALOG OF DOCTRINE TOPICS

Introduction to Combat Support
CS Principles
CS Construct

Command Relationships
CS Components to the commander, Air Force forces
Processes and Capabilities
Sourcing and Reachback

Posturing Responsive Forces
Planning
Deploying Personnel and Equipment
Lines of Communication
Receiving and Bedding Down

Base Forces
Airbase Opening Forces
Airbase Opening Planning
Airbase Opening Transition and Transfer
Establishing Operating Locations
Receiving and Bedding Down Forces
Sustaining operating locations (OLs)
Recovering OLs
Closing OLs

Protect Forces

Generate the Mission
Mission Generation Needs
Mission Generation Sub-Capabilities
Mission Generation Capability Sourcing

Support the Mission, Forces, and Infrastructure
Maintain Support for Mission and Infrastructure
Assist Mission, Forces, and Infrastructure
Maintain Forces
Distribution Support
Supply Mission, Forces, and Infrastructure

Sustain the Mission, Forces, and Infrastructure
Sustainment Command and Control
Establishing a Sustainment Infrastructure
Repair and Maintain Materiel and Equipment
Sustainment Resupply Distribution and Delivery
Total Asset Visibility
Sustainment of the Total Workforce

Appendix: Functional Capabilities

INTRODUCTION TO COMBAT SUPPORT

Last Updated: 21 December 2015

The Air Force defines combat support (CS) as **the foundational and crosscutting capability to field, base, protect, support, and sustain Air Force forces across the range of military operations.** This definition meets the Service's needs for an overarching doctrinal perspective on CS. The nation's ability to project and sustain airpower depends on effective CS. CS enables airpower through the integration of its functional communities to provide the core effects, core processes, and core capabilities required to execute the Air Force mission. The integration of these functional communities ensures Air Force forces are ready, postured, equipped, employed, and sustained at the right place and time to support the joint force.

COMBAT SUPPORT PRINCIPLES

Last Updated: 21 December 2015

The foundation of combat support (CS) is a ready force, properly sized, organized, trained, and integrated. The structure comes from diverse functional communities that train and are equipped to provide a wide variety of capabilities. CS derives its capabilities from three overarching principles:

- **CS enables operations in peacetime and wartime with effects supporting US national interests at any time or place across the range of military operations.** CS includes the essential capabilities, functions, activities, and tasks necessary to employ all Air Force elements of air, space, and cyberspace forces at home station or while deployed. The increasing frequency of operational missions conducted from outside an operational area (e.g., remotely piloted aircraft, cyberspace operations) renders the term expeditionary combat support obsolete. When organized as, or as part of, an air expeditionary task force, CS remains under the operational control of a commander, Air Force forces, to accomplish assigned missions and tasks.

- **CS provides essential support while minimizing the forward footprint and maximizing reachback,[1] thus increasing effectiveness and responsiveness.** This essential support ensures the Air Force can quickly respond to a mission with a right-sized force, and with maximum effectiveness worldwide.

- **CS provides the ability to transition swiftly from home station to a deployed environment and between operational requirements.** CS planners should carefully examine requirements at deployed locations while operations continue at home station.

[1] Reachback is "the process of obtaining products, services, and applications, or forces, or equipment, or material from organizations that are not forward deployed." (Joint Publication [JP] 3-30, *Command and Control of Joint Air Operations*)

COMBAT SUPPORT CONSTRUCT

Last Updated: 21 December 2015

Core effects, the end result of combat support (CS), are produced from the core processes. Core capabilities are then used within the core processes to produce the effects necessary to achieve mission objectives. The core capabilities are formed by the employment of functional communities in a synergistic manner. The functional communities are those areas where Airmen who perform CS duties operate. This construct represents an Air Force-wide enterprise; some elements can be deployed forward in direct support of a contingency, while other elements can provide additional support to forward forces through reachback. An overview of CS is depicted in the figure, Overview of CS Construct.

A Readied Force **A Prepared Operational Environment** **A Positioned Force**	**CORE EFFECTS**	**An Employed Force** **A Sustained Force** **A Reconstituted Force**
Readying the Force **Preparing the Operational Environment** **Positioning the Force**	**CORE PROCESSES**	**Employing the Force** **Sustaining and Recovering the Force** **Reconstituting the Force**
Field Forces **Base Forces** **Posture Responsive Forces**	**CORE CAPABILITIES**	**Protect Forces** **Generate the Mission** **Support the Mission, Forces, and Infrastructure** **Sustain the Mission, Forces, and Infrastructure**

FUNCTIONAL COMMUNITIES

Acquisition	Distribution	Munitions Mgmt
AFOSI	Force Support	Postal Services
Airfield Operations	Financial Mgmt/Comptroller	Public Affairs
Analyses, Assessments, and Lessons Learned	Health Services	Safety
Chaplain Corps	Historian	Science/Technology
Civil Engineer	Judge Advocate	Security Forces
Communications/Information	Logistics Planning	Test and Evaluation
Contracting	Maintenance	Weather Services
	Materiel Management	

Overview of CS Construct

CS Core Effects

CS core effects are the products provided to a commander, Air Force forces (COMAFFOR), as outcomes of the CS core processes. The six CS core effects are:

- **Readied Forces.** Mission ready forces.
- **Prepared Operational Environment.** An environment conducive to mission execution.
- **Positioned Forces.** The right types and amounts of forces and materiel at the right places and times to meet mission objectives.
- **Employed Forces.** Forces, infrastructure, and materiel meeting mission requirements.
- **Sustained Forces.** Forces and materiel conducting persistent operations.
- **Reconstituted Forces.** A recovered force readied for operations.

CS Core Processes

The CS core processes are the standardized, overarching set of macro procedures that use core capabilities to produce CS effects. These macro procedures are the primary means of arranging CS practices due to their cyclical nature. The six CS core processes are:

- **Readying the Force.** Organizing, training, and equipping a fit force to provide mission capability.
- **Preparing the Operational Environment.** Analyzing, planning, and posturing forces, infrastructure (built and natural), and materiel for rapid employment.
- **Positioning the Force.** Deploying, receiving, and integrating forces and materiel at the point of employment.
- **Employing the Force.** Generating the mission, providing right-sized support, and ensuring timely regeneration of forces and materiel.
- **Sustaining and Recovering the Force.** Maintaining effective levels of forces, materiel support, including the physical plant, and infrastructure capability for ongoing operations. Recovering forces, materiel support, and infrastructure damaged from attack, accident, or other incident.
- **Reconstituting the Force.** Reset or redeployment of forces and materiel, ensuring airpower can be reapplied to meet operational needs.

CS Core Capabilities

The CS core capabilities result from the proper employment and integration of the functional communities. These capabilities form the structure of the remainder of this document. The CS core capabilities enable the Air Force to:

- **Field Forces.** Providing fully prepared CS forces to enable a COMAFFOR to meet the

joint force commander's requirements. It includes organizing, acquiring, and tailoring forces to produce a responsive, sustainable, and survivable force.

- **Base Forces.** Establishing, sustaining, recovering, and closing airbases and operating locations (OLs). Providing enduring bases, installations, and OLs with the assets, programs, and services necessary to support and project airpower. For more information, see the discussion on Engineer Execution.

- **Posture Responsive Forces.** Assessing, structuring, scheduling, and processing force capabilities to support mission requirements. It also includes executing a dynamic positioning strategy to maximize CS responsiveness and speed of employment.

- **Protect Forces.** Providing an integrated all-hazards approach for force protection to detect threats and hazards to the Air Force and its mission. Applying measures to deter, pre-empt, negate, or mitigate the identified threats and hazards based on an acceptable level of risk. Actions required to protect forces specifically against hostile action include detecting, identifying, and defeating penetrative or standoff threats to personnel and resources; assessing OLs for threats and available support from host civil and military agencies; disseminating information and warning personnel; and protecting infrastructure. For more information see the discussion of Air Force force protection.

- **Generate the Mission.** Preparing, configuring, launching, recovering, and regenerating weapon systems and payloads. It also includes conducting security cooperation engagements with partner nations as required in support of the combatant commander's (CCDR) theater campaign plan.

- **Support the Mission, Forces, and Infrastructure.** Supplying, distributing, and maintaining goods, services, and infrastructure throughout the operational area.

- **Sustain the Mission, Forces, and Infrastructure.** Ensuring CS is maintained for the duration of operations, maximizing the use of reachback, to include the industrial base, when needed.

CS Functional Communities

CS functional communities are fundamental to effective airpower. Each makes unique contributions to the overall mission. A detailed discussion of these functional communities appears in Appendix, *Functional Communities*.

COMMAND RELATIONSHIPS

Last Updated: 21 December 2015

A combatant commander (CCDR) exercises combatant command authority (COCOM) and directive authority for logistics (DAFL). The CCDR exercises these authorities over assigned and, if provided by the Secretary of Defense, attached Air Force forces (AFFOR) through the commander, Air Force forces (COMAFFOR). Air Force command and control (C2) structures for combat support (CS) are designed to enable a COMAFFOR to execute the Service's Title 10, United States Code (U.S.C.) responsibility for logistical support while also supporting the CCDR's exercise of DAFL.

When an Air Force major command (MAJCOM) is also the Service component to a CCDR (component MAJCOM, or C-MAJCOM), the C-MAJCOM organizes and employs forces to accomplish assigned missions. C-MAJCOMs provide the first echelon of reachback support to forces in the CCDR's area of responsibility. A numbered Air Force (NAF), if designated as a component NAF (C-NAF), provides the senior Air Force warfighting echelon and the organizational combat support planning expertise. The C-NAF staff plans the C2 architecture for operations. Regardless of the source of support or the support C2 structure, the Service component is responsible for ensuring essential support for all assigned and attached Air Force personnel within a joint force. Air Force commanders should be prepared to accept single-Service responsibility for joint common use items.

The C2 of CS operations produces a fully integrated CS capability extending from the lowest levels of capability (i.e., base and below) to the highest levels of resource allocation (headquarters Air Force) and operational planning (Air Force component, joint force, and above). Commanders and decision-makers have an immediate need for capabilities that capture, transmit, and share data about the status of current operations, courses of action, future plans, and predictive analyses. At each level there should also be a common set of dynamic and tailorable reporting and tracking tools.

Roles and Responsibilities

Major CS responsibilities for the COMAFFOR and AFFOR staff include:

- Develop supporting plans to meet CCDR mission requirements.
- Coordinate planning activities and requirements with force providers.
- Coordinate with commanders' staffs at all appropriate levels to identify employment locations.
- Plan and coordinate communications and information support.
- Plan and coordinate force protection support.

- Plan, coordinate, and provide materiel distribution.
- Plan and coordinate maintenance and munitions support.
- Plan, coordinate, and provide emergency services.[1]
- Establish and identify manpower and equipment requirements.
- Identify host-nation support requirements.
- Ensure legality of all aspects of operations.
- Develop expeditionary site plans for approved employment locations.
- Manage allocated war reserve materiel.
- Ensure efficient use of physical plant to ensure available facilities and infrastructure to support in-garrison operations.
- Identify initial material capability gaps and provide input to acquire or modify new or existing weapon systems.
- Plan and execute operations security in support of military operations, activities, plans, training, exercises, and capabilities.

---

[1] Emergency services include fire emergency services (FES); explosive ordnance disposal (EOD); emergency management (EM); and chemical, biological, radiological, and nuclear (CBRN) and preparedness and response. For a more detailed discussion see Annex 3-34, Engineer Operations.

COMBAT SUPPORT COMPONENTS TO THE COMAFFOR

Last Updated: 21 December 2015

The commander, Air Force forces (COMAFFOR), has responsibility for the command and control (C2) of combat support (CS) operations for assigned and attached Air Force forces (AFFOR). The majority of CS forces operate within air expeditionary wings (AEWs). The COMAFFOR has a direct command relationship with subordinate Air Force commanders. Those subordinate commanders then usually have direct command relationship with the CS units and personnel in the AEWs. In the wings the CS personnel are aligned in the wing staff, the maintenance group, and the mission support group. The COMAFFOR may also choose to retain some theater level CS assets above the wing level. In this case, a portion of the CS personnel are aligned in squadrons or groups that report directly to the COMAFFOR or to an air expeditionary task force-X commander if one is designated (see the figure, COMAFFOR's CS Forces[1]).

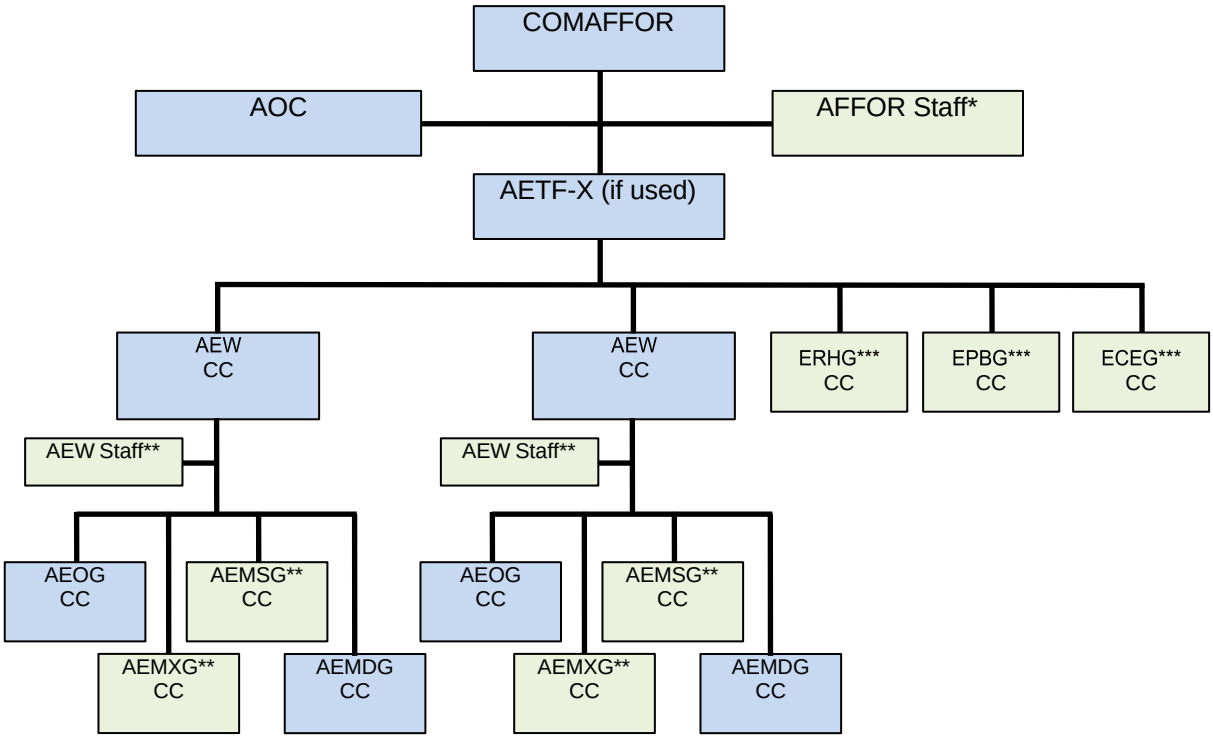

*Preponderance of CS staff functions reside in the AFFOR Staff
**Majority of the CS personnel reside in the Mission Support Groups, M aintenance Groups and on AEW staffs
***Theater wide CS enablers such as the RED HORSE groups (ERHG), Prime Base Engineer Emergency Force (BEEF) Groups (EPBG), and Civil Engineer Groups (ECEG) can be aligned directly under the COMAFFOR

COMAFFOR's CS Forces

[1] The figure is one notional command relationship. For a more extensive C2 discussion, see Annex 3-30, *Command and Control*.

While the preponderance of CS forces operates within AEWs primarily working at the tactical level, the COMAFFOR provides overall C2 and specific direction at the operational level through the AFFOR staff (the A-Staff and special staff). Within the Air Force component headquarters, CS staff functions are aligned in several sections of the AFFOR staff as shown in the figure, CS Components in the AFFOR Staff. CS components of the A-Staff should interface continuously with the AOC for planning, support, and sustainment of operations.

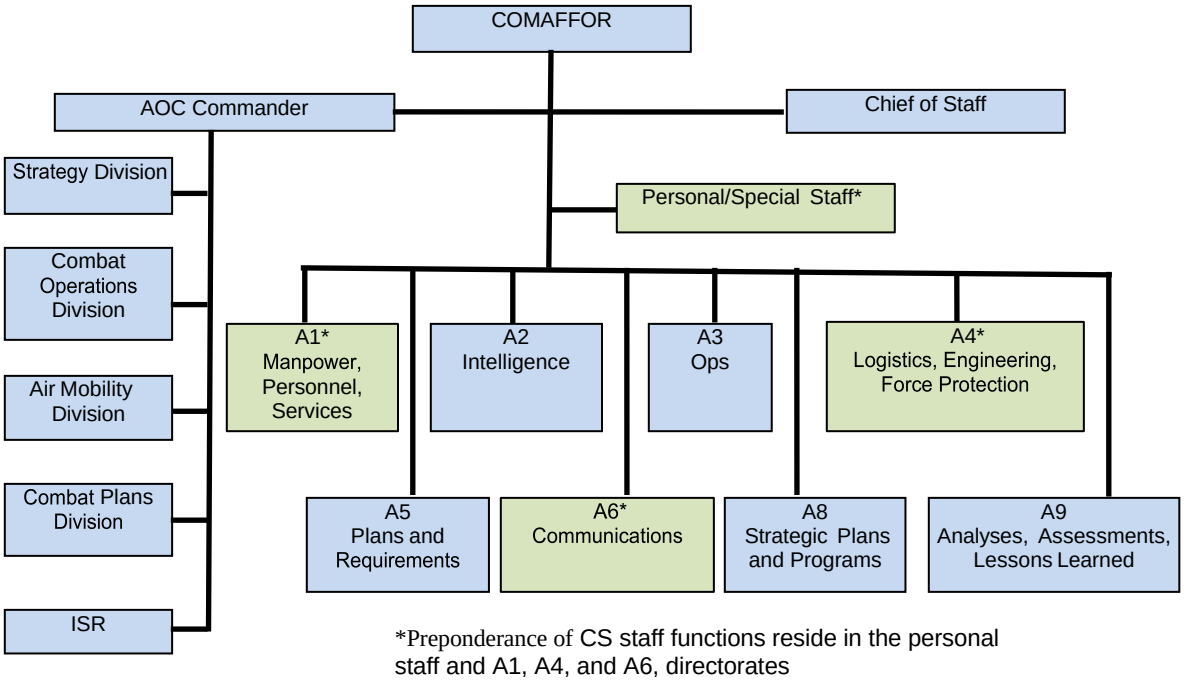

CS Components in the AFFOR Staff

The AFFOR staff coordinates with associated joint task force headquarters staffs to plan, coordinate, and execute required support functions. The AFFOR staff interfaces with joint staffs to:

- Coordinate in decision-making and planning.
- Integrate CS into theater operations.
- Develop detailed CS plans.
- Establish a joint logistics/support architecture.
- Ensure unity of CS effort.
- Integrate national and theater CS.
- Perform sustainability analyses.

Vertical and Horizontal Communications

Based on the breadth and complexity of CS, all C2 nodes, from the COMAFFOR to fielded forces, should communicate necessary information, both vertically and horizontally, to integrate all combat support efforts. The AFFOR and AOC staffs should consider the effects to operations of their overall CS decisions. Information should be produced and consumed continuously throughout mission operations; information sharing is essential to

successfully executing the mission. Mission success depends upon getting the right information to the right place at the right time.

To facilitate attainment of mission objectives, the COMAFFOR should clearly disseminate the commander's intent to subordinate commanders and staffs. The COMAFFOR should establish the battle rhythm and information requirements.

CS functional communities should be linked with CS core processes across the staff to facilitate horizontal communications. CS systems architecture should provide a robust and secure capability and be integrated across all CS functional areas.

PROCESSES AND CAPABILITIES

Last Updated: 21 December 2015

To perform command and control (C2) of combat support (CS), staffs rely on underlying CS business processes to facilitate monitoring, assessing, planning, and execution of steady-state/peacetime CS activities supporting military operations.[1] The following descriptions of C2 of CS processes and capabilities bring into focus the continuum of action required to link operational and CS capabilities to achieve desired effects. These continual processes also allow for a rapid and smooth transition from steady-state to contingency operations and nest with the joint operations planning process as outlined in Joint Publication (JP) 5-0, *Joint Operation Planning*.

Monitoring

Effective monitoring involves continually collecting, storing, maintaining, and tracking data. Monitoring enables CS planners to anticipate where CS capabilities may be needed. Priorities should be determined in advance based on the nature of the operation. A comprehensive mission analysis by the commander, Air Force forces', A-staff should produce a list of a commander's critical information requirements to focus staff monitoring efforts on mission-essential data. The AFFOR staff should constantly monitor information from all sources while maintaining focus on the commander's intent.

Assessing

JP 3-0, *Joint Operations*, defines assessment as "a continuous process that measures the overall effectiveness of employing joint force capabilities during military operations." For Air Force CS the focus is on continual measures of CS capabilities to determine the impact of conditions and events on force capabilities and commander's intent. It involves the processes of analysis and evaluation to obtain situational awareness and alternative solutions. Analyzing data provides the foundation for potential courses of action (COAs) during the planning phase. Proper analysis ensures that the limitations of the environment are well defined.[2]

Planning

Thorough planning should address all levels of CS. Planning involves development and evaluation of COAs for support operations. The flexible nature of CS forces gives the operational level planner the freedom to scale and sequence forces into a theater to

[1] The Air Force C2 of CS processes and capabilities are derived from JP 4-0, and are expanded to meet the Service requirements for the more comprehensive C2 of CS, rather than just logistics.

[2] For more detail on assessment, see JP 3-0 and Annex 3-0, *Operations and Planning*.

enhance mission effectiveness. Planners should take advantage of reachback capabilities available and right-size the deploying force to place the correct capabilities into theater.

Execution

Execution is the overall dissemination and implementation of a plan to ensure successful mission accomplishment. The need for solid C2 is critical in the coordinated execution of the joint force commander's campaign.

SOURCING AND REACHBACK

Last Updated: 21 December 2015

Combat support (CS) forces with their capabilities are principally organized and resourced in unit type codes (UTCs) that are incorporated into air expeditionary task forces (AETFs).[1] UTCs are used to describe the personnel and materiel presented to the commander, Air Force forces (COMAFFOR), as part of the AETF. The scalable nature of UTCs allows CS to tailor support requirements with force modules. A force module is a grouping of operational and combat support forces with their accompanying equipment and supplies that are modular and scalable for an operation. This capability enhances the flexibility and usefulness of Air Force forces during any form of operation. The current AETF presentation is in the form of six different force modules: Open the Airbase, Command and Control, Establish the Airbase, Generate the Mission, Operate the Airbase, and Robust the Airbase. The force modules are composed of multiple UTCs, which are tailored for deployment based on needed capabilities. This allows CS to deploy with the smallest required footprint to support the mission. Reachback to the continental United States and rear overseas locations is used for those capabilities not brought forward and can include major command (MAJCOM), depot, field operating agency, or commercial support.

CS capabilities can be presented individually or in combination, depending on the specific requirement. For example, CS capabilities can also be used to support security cooperation engagements and the individual country plans of partner nations. These capabilities are presented to the COMAFFOR in UTCs especially designed to support security cooperation engagements. In addition, CS capabilities supporting security cooperation engagements should be deployed with the smallest required footprint to support the mission and should rely on reachback for additional support as required.

Reachback

There are many locations for CS reachback. They include component MAJCOM, component numbered Air Force, and Air Staff agencies as well as the various functional communities field operating agencies, and centers.

[1] For more information and definitions of force modules, see AFI 10-401, *Air Force Operations Planning and Execution*.

POSTURING RESPONSIVE FORCES

Last Updated: 21 December 2015

Posturing responsive forces entails analyzing, structuring, scheduling, and processing force capabilities to support operational mission requirements. It also includes executing a positioning strategy to maximize combat support (CS) responsiveness and speed of employment.

A commander, Air Force forces, uses the CS core processes to posture responsive forces. For example, posturing UTCs during Readying the Force, tailoring for potential operational areas during Preparing the Operational Environment, and prioritizing manpower and equipment for Positioning the Force are all aspects of posturing responsive CS forces.

Posturing responsive forces bridges the gaps between the planning and execution portions of any plan. Posturing involves a continuous global effort ranging from maintaining worldwide readiness of personnel, equipment, and units through training, exercising, and continuously assessing worldwide prepositioning equipment strategies.

Prioritizing and right-sizing forces and their equipment in unit type codes (UTCs) are critical to ensuring adequate capability with minimum forward footprint. UTCs are developed to provide a variety of capabilities. The goal is to deploy right-sized UTCs to minimize tailoring. Right-sized UTCs provide a generic building block capability, greater flexibility to planners, and optimal support to the warfighter. At execution, tailoring should be accomplished based on mission and deployment location. UTCs are not self-sustainable and are made up of manpower, equipment, or both manpower and equipment. UTCs should be modular, scalable, deployable worldwide, to a single organization, and developed to fulfill a specific capability.[1]

[1] Refer to AFI 10-401, *Air Force Operations Planning and Execution*, for further details on the construct of UTCs.

PLANNING

Last Updated: 21 December 2015

Planning is required at each echelon of command and across the spectrum of combat support core processes. Anticipating requirements, coordinating with all the relevant participants, improving responsiveness posture, and rehearsing the execution plan are all important elements of planning. Combat Support (CS) planners in the commander, Air Force forces', A-staff should be involved in planning, from Readying the Force to Reconstituting the Force, to ensure feasibility of planned operations. Planners should gather, analyze, and disseminate information about the operational environment's support capabilities and constraints, and present it in an appropriate annex or appendix of an operation plan (OPLAN) or campaign support plan.

In planning for CS requirements, the minimum possible footprint consistent with effective operations is desired and should be a planning consideration, especially while preparing the operational environment. Limiting the footprint frees resources for other requirements and reduces vulnerability to adversary attacks. Wherever possible, establishing processes and infrastructure with maximum reachback capability improves agility and efficiency.

Deliberate Planning

Deliberate planning prepares for military operations based on the best available information and using forces and resources apportioned by the Joint Strategic Capabilities Plan. Deliberate planning addresses the most likely support scenarios for military operations in advance of impending operations. A quick transition can be made to crisis action planning (CAP) when deliberate planning is approached as a continuous process with periodic updates. Whether the specific preplanned OPLAN, some variation of the plan, or some entirely unanticipated operation is required, deliberate planning is required in preparation for deploying and employing forces. CS forces should be integrated fully into the planning process.

Deliberate planning also prepares for security cooperation engagements with partner nations, normally expressed in a campaign support plan or a country plan. In these situations, forces and resources may not be available and planners may need to use the "request for forces" processes to obtain the needed capabilities. CS forces to be deployed to conduct these types of engagements should be fully integrated into the planning process.

Crisis Action Planning

CAP leads into Positioning the Force and is usually accomplished in a time-constrained environment addressing situations and emergencies using assigned and attached forces. Crisis action planners follow prescribed CAP procedures that parallel deliberate planning, but are more flexible and responsive to changing events. When developing potential courses of action (COAs), close coordination between CS and operations planners is essential to assure feasibility of those COAs. As a subset of this activity, logisticians should consider alternative logistics COAs to support and sustain operations. Because significant assets are committed in various steady-state contingencies, any new CAP considerations should include the impact of already committed assets in other theaters, and the potential necessity for using some of those assets to support higher priority commitments.

Operations Security

Every functional area has responsibility for operations security (OPSEC) since it is fundamental in the success of all military operations. OPSEC is a process of identifying, analyzing and controlling critical information indicating friendly actions associated with military operations to reduce vulnerabilities of friendly actions to adversary exploitation. For more information on OPSEC see Joint Publication 3-13.3, *Operations Security*.

DEPLOYING PERSONNEL AND EQUIPMENT

Last Updated: 21 December 2015

The deployment of personnel and equipment via the Positioning the Force core process involves the actual movement, reception, and beddown of tailored and prioritized forces accomplished through the use of lines of communication. Actions include, but are not limited to:

- Establishing an initial operational cadre.
- Accounting for US, host nation, and coalition prepositioned assets and support.
- Deploying en route support force and employment elements.
- Deploying, receiving, and accounting for forces.
- Reviewing baseline surveys and situational awareness to protect forces.
- Preparing for operations.
- Initiating reachback operations.

Deploying personnel and equipment fulfills the requirements levied by the commander to meet operational priorities. Deployment should expedite personnel, aircraft, and equipment movement to meet operational priorities.

Flow Prioritization

Prioritization should be based on the supported commander's needs. Phasing provides an orderly schedule to move forces and assists commanders in refining requirements in terms of having the right capabilities in place, in the right order, to maximize the efficiencies of beddown and minimize force protection risks. Proper phasing of deploying forces is essential to ensure the coordinated buildup of support, command and control (C2), sustainment, and combat power throughout the theater and at each operating location.

En Route Infrastructure

Political or physical restrictions on personnel, aircraft, and equipment in a forward environment may restrict the ability to deploy. These restrictions mandate an en route infrastructure capable of staging, storing, caring for, and managing assets and their flow between the time they leave the origination point to the time they arrive at the final destination. An efficient en route infrastructure that can be quickly activated and tailored

should assist in overcoming these restrictions.[1]

In-transit Visibility

In-transit visibility (ITV) information on cargo, passengers, medical patients, and personal property provides commanders the ability to track the location and progress of movement of critical resources essential to force readiness in the theater.
Modern C2 systems use ITV to reduce the element of uncertainty inherent in deployed operations. Combat support ITV systems should be integrated in a network accessible to theater commanders to provide status of assets at en route locations, reception points, staging points, and final destinations.

---

[1] For more information, see Annex 3-17, *Air Mobility Operations*.

LINES OF COMMUNICATION

Last Updated: 21 December 2015

Air, ground, and sea lines of communication (LOCs) are transportation bridges to deploy, sustain, and redeploy forces to and from the continental US and within a theater. Establishing protected inter- and intratheater LOCs is vital to the success of combat support (CS). The Air Force establishes LOCs among selected aerial ports of embarkation, en route locations, forward support locations, and aerial ports of debarkation (APODs). CS forces are integral to establishing and operating the air LOCs and the supporting nodes.

Bases used for APODs, either en route or at the final destination, are frequently non-US controlled and require extensive support provided by the host nation. Such host nation support reduces the need to lift Air Force support to the new location. Planners should consider the following when developing LOCs:

- Overflight, landing, port, ground transportation rights, and diplomatic clearances provided by the host and en route nations.
- Existence or feasibility of establishing agreements, including status of forces agreements, with host and en route nations.
- Availability of support (e.g., security, fuels availability, and materiel handling).
- Pre-sited munitions handling areas, especially at ports of debarkation for afloat prepositioning forces and standard munitions packages hot cargo areas.
- Ability to protect the LOC and transit corridors.
- Distances to prepositioned war reserve materiel and between APODs.
- Ability to establish secure command and control for air operations center-to-unit communications.

RECEIVING AND BEDDING DOWN

Last Updated: 21 December 2015

Receiving forces involves offloading at staging locations, accounting for all assets, and moving to operating locations. Bedding down forces occurs at a variety of locations ranging from main operating bases to austere bare bases. Forces should immediately be able to support operations upon arriving at their final destination.

Reception, Staging, Onward Movement, and Integration

Reception, staging, onward movement, and integration (RSOI) consists of the processes required to transform arriving personnel and materiel into forces capable of meeting operational requirements throughout a theater. Air Force units operating at an aerial port of debarkation (APOD) should also be prepared to facilitate joint RSOI activities for other Service components. Separate staging areas should be established for units that will bed down at the APOD and other forces that will be marshaled for onward movement. Sustainment and force protection (FP) for transiting forces are required until onward movement occurs.

Force Accountability and Beddown

Force accountability allows commanders to determine when they have force closure, the point in time they have the forces needed to accomplish their mission. Proper force accounting allows commanders to plan for additional combat support needs such as beddown space and feeding capability. Should an emergency occur at home station or the deployed location, commanders should also be able to locate their people quickly. Coordination with the contingency contracting office should also account for all contractor personnel supporting operations at the deployed location.

Force Protection

Every functional area has responsibility for FP. FP is a fundamental principle of all military operations as a way to ensure the survivability of a commander's forces. The Air Force takes an integrated approach to FP in order to conserve the force's fighting potential. For more information, see the discussion, Protect Forces.

Intratheater Movement

Intratheater movement is critical to supporting and sustaining Air Force operations; it should be planned and coordinated in advance of deployment, and be ready to implement as soon as practical. A key component of intratheater movement is airlift. Frequency of regular channel support is done through a scheduled theater airlift routes system, which is a series of hub and spoke routes developed to move people, mail, parts, and other types of

resupply items. The joint force commander's staff is responsible for defining the requirements through the joint deployment distribution operations center (JDDOC). The JDDOC directs, coordinates, and synchronizes deployment and redeployment, execution, and distribution operations for the joint movement center. The commander, Air Force forces, through the air operations center and its air mobility division, is responsible for designing the routes to satisfy requirements for all Services.

BASE FORCES

Last Updated: 21 December 2015

For the Air Force, opening and establishing an operating location (OL) normally entails opening and establishing an airbase. Establishing OLs encompasses assessing, planning, reconfiguring, modifying, building, and inspecting infrastructure and utilities to support the mission, personnel, and equipment at specific OLs. The minimal infrastructure required to operate an airbase includes: runways, taxiways, ramps, roads, building sites, utility grids, communications grids, aviation fuels grids, munitions storage and assembly areas, facilities, entry control points, barriers, and defensive positions.

Airbase Opening

Airbase opening facilitates strategic and operational reach, paves the way for deployment and sustainment operations, and eases the transition between operational-level objectives and subsequent tactical-level operations. Airbase opening initiates and achieves initial operating capability of an airbase to execute its assigned operational mission by providing functional capabilities for command and control (C2), force protection (FP), cargo and passenger handling, logistics, airfield operations, force accountability, finance and contracting, and reception and beddown of follow-on forces. Open the Airbase forces normally arrive first and assess the airbase for establishment of minimum airfield operating parameters, C2, and supporting host-nation support capabilities. It may support any Service or nation and provides capabilities to transition responsibilities to the follow-on forces. Open the Airbase forces are presented in standard force modules, which are tailored to the specific situation based on Air Force forces planning.

Senior Airfield Authority

A senior airfield authority (SAA) is an important position during airbase opening and the transition following airbase opening. The SAA is responsible for the control, operation, and maintenance of the airfield to include the runways, associated taxiways, and parking ramps as well as land and facilities affecting airfield operations. The SAA is also responsible for coordination of all component or joint task force aircraft and airfield facilities to avoid splitting responsibilities among the Services. The SAA controls flightline access and is responsible for the safe movement of aircraft. The joint force commander should designate the Service component responsible for airbase operations. That designated Service component should appoint an SAA for airfield operations. The SAA should have aviation experience. If the designated SAA is not available at the start of operations, an on-site field grade air mobility liaison officer or the initial airbase opening forces commander (e.g., contingency response force commander, or the mission support group commander trained and certified in SAA duties and responsibilities including air traffic control and airfield/airspace

management) may serve as acting SAA.

AIRBASE OPENING FORCES

Last Updated: 21 December 2015

The Air Force has numerous capabilities and forces used to open air bases. The specific mix of forces for opening an airbase or a group of airbases is dependent upon the context of the particular situation.

- **Contingency Response Forces (CRF)** are the Air Force's standing initial airbase opening response force. These units are designed as organic, rapid response, initial airbase opening units. CRFs may provide support after initial airbase opening in support of partner nation engagement, among other activities.

- **Joint Task Force-Port Opening (JTF-PO)** facilitates joint reception, staging, onward movement, and integration and theater distribution by providing an effective interface at the aerial port of debarkation and distribution node. The JTF-PO is a special force for airfield opening designed to combine specific Air Force and Army capabilities to provide the commander of US Transportation Command with a ready-to-deploy, jointly trained force for opening ports and establishing the initial distribution network.

- **Combat Communication Units** provide scalable "extend the net" communications support for the full range of military operations, and provide communication capability for command and control reachback at and above the tactical level for a variety of Air Force and joint missions. Units can support anywhere from 1 to 3,000 users and deploy within 72 hours of notification. Services may include unclassified/classified networks (confidential/secret/ allied/coalition), non-secure/secure voice networks, expeditionary mass notification systems, ground to air radio support, and engineering and site survey teams.

- **Air Force Special Operations Command Special Tactics Teams** are comprised of combat control, special operations weather teams, pararescue, and tactical air control party personnel. These teams may augment Army, Marine, and special operations forces during airfield seizures and provide airfield survey and assessment, air traffic control, navigational aids, tactical airfield lighting, weather observation and forecasting, battlefield trauma care, and marshaling services.

- **820th Base Defense Group** provides a fully integrated force protection (FP) assessment team to support expeditionary airfield opening. The unit is capable of airborne, air mobile, and air-land insertion operations for 14-30 days and has the organic capability to provide airfield security and initial FP assessment of the airfield. The unit can link with initial entry or base seizure forces and provide a smooth transition to airfield opening forces.

- **Prime Base Emergency Engineer Forces (BEEF) Teams.** Prime BEEF teams provide the full range of engineering expertise and emergency services needed to establish, sustain, recover, and close bases for employing Air Force weapons systems or supporting joint, interagency, or multinational operations. Capabilities include light horizontal and vertical construction; managing and operating power, environmental control, water, and waste systems; rehabilitating critical infrastructure; the erection of specialized structures; pest management; environmental management; bare base master planning, design, and contract support; hazardous materials response; structural and aircraft firefighting; rendering safe and removal of unexploded ordnance; defeat of improvised explosive devices, weapons of mass destruction, and chemical, biological, radiological, and nuclear threats; and base recovery after attack to include airfield damage repair and repairs to facilities or infrastructure systems.

- **RED HORSE Units.** RED HORSE units are Air Force units wartime-structured to provide a heavy engineer capability that are mobile, rapidly deployable, and largely self-sufficient for limited periods of time. They provide engineer and force support capabilities that may be tasked to facilitate airbase opening immediately following seizure operations. Capabilities include dedicated flexible airfield and base heavy construction and repair capability, along with special engineering capabilities to include water well drilling, base denial, batch plant and quarry operations, automated building machine and ultimate building machine facility construction, and insertion engineer operations.

- **Civil Engineer Maintenance Inspection and Repair Teams** provide depot level maintenance of major electrical power generation and distribution systems as well as mobile and fixed aircraft arresting systems at contingency operating locations, en route bases, or critical stateside bases. Team capabilities include routine calibration, emergency maintenance and repair, and major overhaul and repair of both real property and non-real property installed equipment. This team also provides technical assistance in conducting electrical system infrared surveys, troubleshooting electrical and mechanical system faults, and diagnosing problems and determining solutions.

- **Airfield Assessment Teams** perform site surveys to determine airfield suitability, clear debris, make expedient airfield damage repairs, and provide material requirements and initial assessment of required follow-on forces. Direct team support includes explosive ordnance reconnaissance, minimum airfield operating surface selection, airfield lighting and marking, arresting system installation and utility system repairs required to sustain or recover airfield operation capabilities.

- **Explosive Ordnance Disposal Teams** may augment other airbase opening forces such as special tactics teams, CRF, and airfield assessment teams, when intelligence or threat analysis expects unexploded explosive ordnance contamination or if improvised explosive devices are suspected. Direct support includes the destruction of stockpiled and abandoned enemy ordnance, route clearance, post-attack investigation, and counter-improvised explosive device operations.

Open the Airbase forces complete site assessments and set up minimum cantonment functions such as FP, communications, sleeping, feeding, sanitation, and internal medical capability such as public health and advanced life support. These forces provide expeditionary site plans and airfield survey information for development of the airfield suitability and restrictions report.

AIRBASE OPENING PLANNING

Last Updated: 21 December 2015

Airbase opening is a critical task for military operations and requires significant attention during planning.

Deliberate Planning

Requirements for airbase opening should be included in the deliberate planning process. Long range planners and current operations planners can assist in the exploitation of both classified and unclassified venues and maintain contact with the Air Force component headquarters. If possible, planners should include personnel from the applicable airbase opening force, representatives from the seizure force, and liaison elements to minimize operational seams.

Theater Capabilities Planning

Airfield assessment in support of theater capabilities planning is a process to accomplish airfield surveys and determine relevant support requirements. Before deployment, numerous capabilities exist to create an accurate picture of the airfield in question and associated infrastructure. If an accurate picture of the airfield is unavailable and forces will arrive shortly, a contingency response force would be employed to survey the airfield to develop the necessary expeditionary site plans and airfield suitability and restrictions report.

Joint Integration Planning

The joint force commander may establish a joint airfield planning and coordination team to address number, type, and location of all bases in the operational area. The team's efforts provide an opportunity for airbase opening forces to obtain evolving information regarding theater requirements.

AIRBASE OPENING TRANSITION AND TRANSFER

Last Updated: 21 December 2015

Airbase Opening Transition Events

There are specific times during airbase opening when transitions between events may drive actions that combat support (CS) forces should be prepared for. The figure, Air Expeditionary Task Force (AETF) Force Modules and Process Seams, illustrates those times when process seams may generate subsequent actions to ensure the airbase opening process is as smooth as possible.[1]

LEGEND	
BOS-I: Base operating support-integrator	MANPADS: Man-portable air defense system
C2: Command and control	SAA: Senior airfield authority
EOD: Explosive ordnance disposal	SHORAD: Short range air defense
FES: Fire and emergency services	SOF: Special operations forces
FP: Force protection	USA: US Army
OPS: Operations	USMC: US Marine Corps

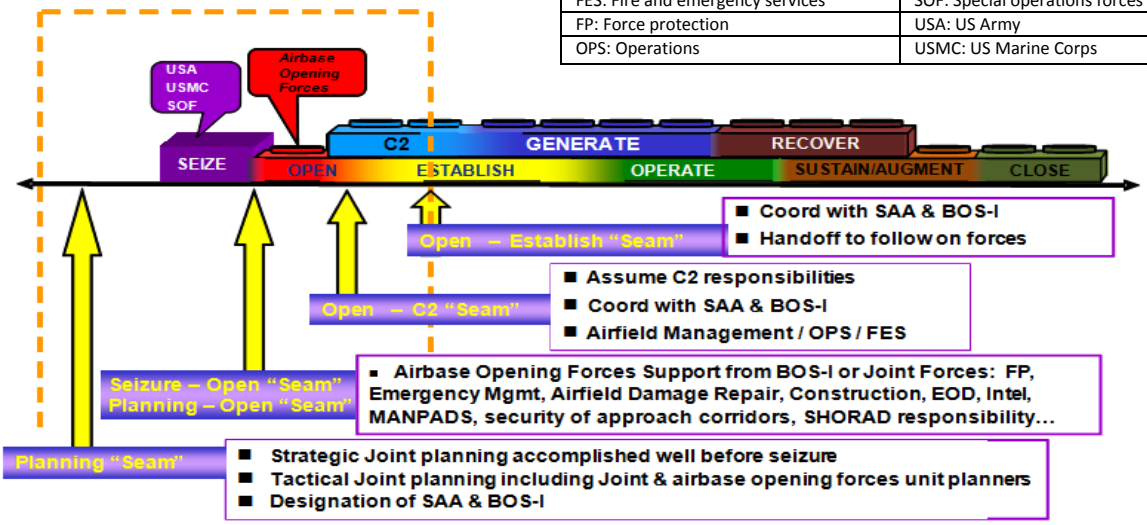

AETF Force Modules and Process Seams

Airbase Opening Transfer of Responsibility

The transfer of responsibilities from airbase opening to the initial Establish the Base force module occurs in two stages.

- Senior airfield authority (SAA) responsibilities will normally transfer from the initial

[1] For more detailed information on force modules as used in airbase opening, see AFI 10-401, *Air Force Operations Planning and Execution.*

airbase opening force commander to the air expeditionary wing or group commander.

- Functional airbase opening capabilities and responsibilities will normally transfer from the initial airbase opening forces (Open the Base force module forces or contingency response force) to the initial Establish the Base force module forces when like forces are in place.

ESTABLISHING OPERATING LOCATIONS

Last Updated: 21 December 2015

Establishing operating locations (OL) forces are presented in standard force modules that are tailored based on the planning process performed by the Air Force forces (AFFOR) staff. These forces' capabilities are designed to support most missions or weapon systems. Personnel performing operations for establishing OLs facilitate the integration of those capabilities within the Open the Airbase and command and control (C2) force modules to provide the airfield's earliest capability to execute its assigned mission.

Base Operating Support-Integrator

The base operating support-integrator (BOS-I) is a combatant commander (CCDR)-designated representative who acts as the joint BOS provider. The Service component with the preponderance of forces should normally provide the BOS-I. A CCDR may designate an individual within a Service component or joint task force (JTF) as the BOS-I at each OL. The BOS-I coordinates the efficient use of mission support resources. Where shortfalls or opportunities for efficiencies exist, the CCDR may task components of JTFs to provide or coordinate specific capabilities (e.g., infrastructure, security, and communications). The BOS-I provides master planning for facilities and real estate. BOS-I responsibilities may include coordination of war reserve materiel assets, collecting and prioritizing construction requirements, seeking funding support, environmental management, emergency management, force protection, and hazardous waste disposal.

BOS-I and Senior Airfield Authority Interaction

BOS-I and senior airfield authority (SAA) have an important interaction with a significant seam. In many cases the CCDR will designate a BOS-I and SAA from different Services at the same location (a common practice is to designate BOS-I responsibilities to the Army component while designating SAA responsibilities to the Air Force component). The BOS-I is the joint BOS provider for the OL or base and the SAA is responsible for the control, operation, and maintenance of the airfield to include the runways, associated taxiways, and parking ramps as well as land and facilities affecting airfield operations. As such, the SAA will perform many BOS function on the facilities immediately surrounding the airfield. The BOS-I and SAA should closely coordinate along this seam during planning and execution of operations. A common solution is to form an agreed-upon line around the airfield and give the SAA responsibility for the area inside the line and the BOS-I responsibility for the area outside the line. In some cases, the SAA should have control of funding and contracting for airfield operations and maintenance services.

Establish Runways, Taxiways, Ramps, Roads, and Building Sites

Planners should consider theater priorities and the limited resources available to construct and operate the infrastructure at OLs. Planners should consider operational requirements, combat support infrastructure needs, and the minimal resources needed to enable mission establishment and operation of the base, including the following:

- **Requirements to establish utility grids:** Water distribution; electrical; fuels; communications; chemical, biological, radiological, and nuclear detection and monitoring; and wastewater collection systems.

- **Requirements to establish facilities:** C2, aircraft operating surfaces, operational facilities, airfield management, air traffic control, weather services, navigational aids, fire crash rescue, munitions, medical, security, administration, maintenance, lodging, dining, etc.

Joint support agreements, status of forces agreements, or other country-to-country agreements help specify tenant and host responsibilities throughout a deployment. When facilities to shelter personnel are limited, a key consideration is whether to erect facilities and establish airfield operations using base expeditionary airfield resources or other contracted assets.

The Air Force component should conduct site surveys and collect data from as many sources as possible during deliberate planning. This process of early engagement facilitates the planning and execution process as well as enhances relationships with country teams in those locations not routinely visited by Air Force personnel.

Plan OL Physical Environment

There are several methods for obtaining the infrastructure necessary to establish an OL: Deploying Air Force assets, contracting, host nation support agreements, acquisition and cross-servicing agreements, inter-Service support agreements, etc. In many cases, the planned OL may already have infrastructure in place that can be made available for Air Force forces. Commanders should consider leveraging functional communities' capabilities during efforts to establish OLs. The more that can be acquired locally without unacceptable risk to health or security, the less that must be stored, maintained, and forward deployed. Commanders should establish relations with local authorities (host-nation military or civilian airfield authorities) to ensure all potential sources of resources required to establish OLs are evaluated. Commanders should be careful not to enter into any oral or written agreement with host nation authorities, unless specifically delegated the authority to do so. Authority to negotiate and conclude such agreements is closely held and tightly controlled. Commanders should consult with their staff judge advocate early in the planning process to assess current international agreements affecting establishment of the OL and identify any required potential international agreements.[1]

[1] See Annex 1-04, *Legal Support to Operations*, for more information.

Environmental planning should be included early in the planning stages. An environmental survey should be completed at any new location to establish a baseline of environmental conditions before a site is put to use. When planning for a new OL, the environmental objectives are to minimize risk to human health and the environment while establishing readiness to accomplish the mission. Commanders should strive to meet four critical environmental goals:[2]

- Compliance with applicable US laws, regulations, international agreements, and DOD, Air Force and combatant command environmental policy regarding environmental standards (consult with legal counsel to determine applicable environmental standards, including final governing standards).

- Conservation to minimize environmental impacts and manage resources.

- Pollution prevention where practical through recycling and reuse, materiel substitution, or process change; compliance with all applicable standards.

- Remedial action to address environmental contamination caused by Air Force activities at the OL.

Planning for Security in the Physical Environment

Commanders should consider integrated defense when determining the location of airbases. To ensure commanders can maintain a secure airbase for operations, they should establish infrastructure that provides adequate integrated defense to mitigate potential threats to the base.

---

[2] Refer to Air Force Handbook (AFH) 10-222, Volume 4, *Environmental Considerations for Overseas Contingency Operations*, for more specific information about environmental goals and applicable compliance requirements.

RECEIVING AND BEDDING DOWN FORCES

Last Updated: 21 December 2015

Receiving forces involves offloading at staging locations, accounting for all assets, and moving to operating locations. Bedding down forces occurs at a variety of locations ranging from main operating bases to austere bare bases. Forces should immediately be able to support operations upon arriving at their final destination.

Reception, Staging, Onward-Movement, and Integration

Reception, staging, onward-movement, and integration (RSOI) transforms arriving personnel and materiel into forces capable of meeting operational requirements. Air Force units operating at an aerial port of debarkation (APOD) should be prepared to facilitate joint RSOI activities. Separate staging areas should be established for units that will bed down at the APOD and other forces that will be marshaled for onward movement. Factors to consider during RSOI include force accountability, force protection, force support, and intratheater movement.

SUSTAINING OPERATING LOCATIONS

Last Updated: 21 December 2015

Forces should be able to assure sustained operational capability through maintenance, repair, and preservation or facilities, real property-installed equipment, runways, taxiways, ramps, roads, utilities, fuel systems and other built (real property) and natural infrastructure used in support of the mission. For additional information see Annex 3-34, *Engineer Operations*.

The following are the major functions the commander, Air Force forces (COMAFFOR), and Air Force forces (AFFOR) staff should ensure are prepared to sustain operating locations:

- **Infrastructure Planning:** Includes those actions taken to forecast existing capacity against authorized allowances, taking into consideration future mission or operational requirements leveraging principles of asset management to factor in total asset accountability when making resource based decisions. The AFFOR A4 usually conducts operational planning for the COMAFFOR in this area.

- **Infrastructure Programming:** Those actions taken to validate requirements, determine quantities, forecast costs to construct and determine methods of accomplishing acquisition either in-house or by contracting methods. The AFFOR A4 usually conducts operational planning for the COMAFFOR in this area.

- **Infrastructure Design:** Includes applying standards to ensure maximum end user performance, energy efficiency, and ability to meet applicable laws and codes related to life, safety, health, and welfare. The AFFOR A4 usually conducts operational planning for the COMAFFOR in this area.

- **Infrastructure Construction:** Performed by military forces or through contract augmentation. The AFFOR A4 usually conducts operational planning for the COMAFFOR in this area.

- **Infrastructure Maintenance and Protection:** Includes operation, hardening, and sustainment of facilities, infrastructure, and installations. The AFFOR A4 usually conducts operational planning for the COMAFFOR in this area.

- **Environmental Compliance:** Ensures compliance with applicable US laws and regulations; international agreements; DOD, Air Force, and combatant command environmental policy; country-specific environmental compliance standards; foreign final governing standards; and the overseas environmental baseline guidance document. The AFFOR A4 usually conducts operational planning for the COMAFFOR in this area.

- **Light or Heavy Construction/Repair:** Performed by RED HORSE, Prime BEEF, or through contract augmentation. The AFFOR A4 usually conducts operational planning for the COMAFFOR in this area.

- **Infrastructure Demolishing/Divesting:** The actual removal by demolition, disposal or reuse of an item from the Air Force real property inventory. The AFFOR A4 usually conducts operational planning for the COMAFFOR in this area.

RECOVERING OPERATING LOCATIONS

Last Updated: 21 December 2015

Following an incident, natural disaster, or enemy attack that damages the operating location (OL), recovery teams perform actions to restore the OL to full operational capability as soon as possible. These actions may include, but are not limited to: assessment and prioritization of unexploded ordnance; hazards and damage; rendering safe and removing unexploded ordnance; structural and aircraft firefighting; chemical, biological, radiological, and nuclear (CBRN) decontamination and recovery; airfield damage recovery and repair; and facility and infrastructure recovery and repair. For additional information see Annex 3-34, *Engineer Operations*.

The following are the major functions the commander, Air Force forces (COMAFFOR) and Air Force forces (AFFOR) staff should ensure are prepared to recover OLs:

- **Explosive Ordnance Disposal:** Provides the capability to mitigate and defeat explosive hazards presented by the enemy or friendly employment of explosive ordnance. The AFFOR A4 usually conducts operational planning for the COMAFFOR in this area.

- **Incident Management Planning and Response:** Captures the emergency manager/responder role organic to civil engineer units. The AFFOR A4 usually conducts operational planning for the COMAFFOR in this area.

- **Infrastructure Recovery and Repair:** Includes repair of facilities, infrastructure, and installations; structural and aircraft firefighting; CBRN decontamination and recovery; airfield damage repair; and utility repairs. The AFFOR A4 usually conducts operational planning for the COMAFFOR in this area.

CLOSING OPERATING LOCATIONS

Last Updated: 21 December 2015

A commander with the appropriate authority, such as the combatant commander, a joint force commander, or the commander, Air Force forces, may direct closure of a deployed location when that location is no longer required. It is important the following actions be performed:

- Document environmental conditions and collect historical resource information.[1]
- Perform required cleaning and decontamination including mitigation and remediation of chemical, biological, radiological, and nuclear hazards.
- Arrange for hazardous waste disposal and spill remediation to address any imminent threat to human health or safety.
- Close out all accountable records to prevent inadvertent movement of assets to the inactivated location.
- Transfer equipment to host nation activities or pack equipment and mark items for refurbishment or disposal.
- Review support infrastructure (including contracted support) and reduce requirements to maintain the smallest footprint possible as forces depart a forward operating location.
- Ensure a coordinated withdrawal while maintaining unit integrity.
- Destroy all unnecessary classified information and official documents.
- Conduct inventory of all real property items. Coordinate with host nation and other services as required.
- Obtain accountability for personnel assigned, gained, and supported for movement (include contractors, coalition, etc.).

[1] See AFIs 84-101, *Historical Products, Services, and Requirements*, and 84-102, *Historical Operations in Contingencies and War*, and AFH 10-222, Volume 4.

Other Considerations:

- **Deliberate Planning:** Airbase closing is a critical task for military operations and should be addressed as part of the Air Force forces' (AFFOR) deliberate planning process.

- **Theater Capabilities Planning:** Airbase closure operations should determine relevant support requirements necessary to continue supporting operations during redeployment of forces and capabilities and transition an airbase back to the host nation or other entity.

- **Joint Integration Planning:** The joint force commander may establish a joint airfield planning and coordination team that should include personnel from applicable ground component forces and the AFFOR to plan airbase closure in the context of theater requirements and the operational environment.

- **Airbase Closure Transition Events:** There are specific times during airbase closure when transitions between events may drive actions that combat support (CS) forces should be prepared for to ensure the airbase closure process is as smooth as possible.

Functional airbase operating capabilities and responsibilities will normally transfer and consolidate from the Operate the Base force module forces as end of mission and location transfer or closure occurs. Planners and CS forces should be prepared to transfer the following: command and control, aircraft operating surfaces, operational facilities, airfield management, air traffic control, navigational aids, fire crash rescue, munitions, medical, security, administration, maintenance, lodging, dining, etc.

Transfer of senior airfield authority responsibilities will normally occur in parallel with decreasing aviation operations.

Reconstitution

Reconstitution is the restoration of capability following operations and includes both equipment and personnel.[2] Reconstitution maintains control over resources and maximizes asset recovery. The objective is to prepare the reconstituted force for future operations in minimal time.

---

[2] JP 3-35, Deployment and Redeployment Operations.

PROTECT FORCES

Last Updated: 21 December 2015

Force protection (FP) provides integrated offensive and defensive actions to deter, detect, preempt, mitigate, or negate threats and hazards against Air Force operations and assets, based on an acceptable level of risk. FP is a commander's responsibility at all levels. The functional expertise for force protection activities crosses several areas of the Air Force forces' (AFFOR) staff. To integrate all FP activities the commander, Air Force forces, usually designates a member of the AFFOR staff as the FP officer and places the FP officer and associated staff in the special staff of the AFFOR.
FP is a fundamental principle of all military operations as a way to ensure the survivability of a commander's forces. The Air Force takes an integrated all hazards/all threats approach to FP to conserve the force's fighting potential that encompasses many functional areas of expertise. Specific actions required to protect forces against hostile actions include detecting, identifying, and defeating penetrative or standoff threats to personnel and resources; assessing operating locations for threats and available support from host civil and military agencies; disseminating information and warning personnel; and protecting infrastructure and critical information. For a thorough discussion on force protection in the Air Force, see Annex 3-10, *Force Protection*.

Force Protection Threat and Hazard Spectrum

Commanders at all levels are responsible for recognizing threats and hazards to the Air Force across the range of military operations and therefore consider the intentional objectives of threat actors or unintentional effects of hazards. There are a variety of threats and hazards facing the Air Force that may arise from terrorists, insurgents, insiders, criminal entities, foreign intelligence and security services, opposing military forces, activist organizations, and natural or manmade disasters, major accidents, or medical incidents. Airmen should continually plan to counter potential future threats and hazards, both conventional and chemical, biological, radiological, and nuclear related, that have not yet been planned for or seen, as those threats and hazards are constantly evolving. Tactics, techniques, and procedures introduced in one theater could be seen again in other regions and may result in increased force protection measures due to the threat of attack or risk of hazards that could affect ongoing operations.

Risk Management

Commanders determine how best to manage risks. The Air Force views risk management (RM) as the process of identifying critical assets; understanding the threat; understanding Air Force vulnerabilities to the threat; determining risk to personnel, assets, and information; and assuming risk or applying countermeasures to correct or mitigate the risk. In all cases, the assessments include hazards as well as threats. This RM process consists of the following elements: prioritizing assets and

resources by a criticality assessment, identifying potential threats through a threat assessment, analyzing resource and asset vulnerabilities through a vulnerability assessment, determining the risks acceptable to them for a given operation by conducting a risk assessment, and then supervising and reviewing the effort to eliminate or mitigate the risks that are not acceptable. A safety and RM focus ensures maximum protection of people and physical resources.

Integrated Defense

Integrated defense is conducted worldwide, from mature theaters to austere regions. Air Force leadership should adapt to a variety of operational requirements. Some Air Force resources may be geographically separated from the main base. Regardless of location, forces conducting integrated defense employ the basic tactics, techniques, and procedures as those employed at home station during day-to-day operations. As specific threats to base personnel and resources increase, integrated defense forces adjust tactics to counter the threat. Adjustments to operating procedures should be based on the specific threat to operations, the dynamics of operating in an international environment or the way integrated defense efforts collaborate with joint, combined, civilian, and host nation forces. Integrated defense forces should be prepared to operate at a variety of locations and may deploy to sites without existing Air Force or host nation facilities.

Base Boundary and Base Security Zone

Because threats and hazards to operations can come from a wide range of sources, the Airman's perspective requires integrated defense planning in broader terms than other surface-oriented organizations. For example, the threats to an active airfield may extend far beyond the surface area designated as a base boundary. To address these threats, the Air Force uses the planning construct of the base security zone to ensure those ground threats that could impact operations are considered and planned for.

The base boundary is a line that delineates the surface area of a base for the purpose of facilitating coordination and deconfliction of operations between adjacent units, formations, or areas. The base boundary, which is not necessarily the base perimeter, is negotiated on a case-by-case basis between the base commander and the area commander or host-nation authority. The base commander should only negotiate base boundaries with the host-nation authorities after proper coordination and approval from higher headquarters. The multi-dimensional space around the base from which the enemy might impact air operations by launching an attack against approaching or departing aircraft or personnel and resources located on the base is critical to air base defense planning.

Force Protection Intelligence

Force protection intelligence (FPI) is analyzed, all-source intelligence information that when integrated, or fused with other FP information provides an assessment of the threats to DOD missions, people or resources. FPI provides the best available picture of the intents and capabilities of terrorists or extremists, criminal entities and enterprises, foreign intelligence and security services, opposing military forces, and in certain instances, environmental/medical hazards, infrastructure vulnerabilities, and insider threats. FPI is proactive and drives FP decisions in support of commander's intent.[1] FPI is usually

[1] FPI deals specifically with intelligence efforts to counter enemy threats. For additional information on

produced for the COMAFFOR by the A-2 and the COMAFFOR's Air Force Office of Special Investigations representative. A common practice is to include an intelligence officer on the FP officer's staff to help integrate the intelligence information into the overall force protection program.

Force Health Protection

Force health protection is defined as measures to promote, improve, or conserve the behavioral and physical well-being of Service members to enable a healthy and fit force, prevent injury and illness, and protect the force from health hazards. The Air Force expands that definition to clarify the concept as a comprehensive threat-based program directed at preventing and managing health-related actions against Air Force uncommitted combat power.

---

intelligence support to FP, see AFI 14-119, *Intelligence Support to Force Protection (FP)*.

GENERATE THE MISSION

Last Updated: 21 December 2015

Mission generation capabilities provide for the availability of safe, serviceable, and properly configured and prepared Air Force forces to operate and conduct missions across the range of military operations. Considerations for systems support vary with different missions. Central to the ability of the commander, Air Force force's staff to support the assigned mission is to have accurate and timely information in a common relevant operating picture for combat support. Combat support planners should be tightly linked with air operations center planners to ensure the optimal support of operational requirements. All planners should keep in mind the balance between mission production and regeneration. Requirements for ongoing operations in combat should be continually assessed for new demands on aircraft, personnel, and equipment to anticipate increases in mission requirements (use rate, sortie duration, etc.).

The mission generation capability supports the Employing the Force core process. This capability is the culmination of the CS core processes. The other processes occur to reach this capability, with Sustaining the Force happening simultaneously. Generating the mission is followed by the Recovering the Force core process to reconstitute mission elements.

MISSION GENERATION NEEDS

Last Updated: 21 December 2015

Generation of airpower missions requires preparation of the tasked aircraft and installed payloads (munitions, pods, etc.). Generation is characterized by the following operational considerations:

- **Type of Base:** Capabilities at various bases may differ based on location and type. For example, main operating bases (MOBs) may differ from capabilities at forward operating locations (FOLs), particularly if the FOL is austere. MOB resources generally provide capabilities for surge and sustained operations, whereas FOL resources may provide only short-duration surge capability, which may be followed by reconstitution at a MOB.

- **Type of Aircraft:** Capabilities for generating missions depend on the logistics support necessary for various types of aircraft. For example, large-frame aircraft generate high demand for petroleum, oil, and lubricants, which may require additional base defense measures, and combat aircraft may generate a high demand for munitions items.

- **Surge Operations:** Operational requirements may drive mission generation capabilities to surge for extended periods of time. Air operations center and Air Force forces staff planners should identify limiting factors of surge operations and their impact on future air tasking orders, and should provide estimates of post-surge recovery time required to restore the health of the aircraft fleet. If the capability to perform major maintenance is not resident in-theater, surge operations may result in a requirement to accelerate the rotation of aircraft back to home station.

- **Communications:** Communications infrastructure is critical to supporting mission generation activities. Delivery of electronic mission folders, authentication data, crypto keys, and a multitude of other data to the weapon system are essential to operations. Recovered weapon system video, sensor data, maintenance records, etc., can be used to support future operations.

- **Facilities:** Suitable parking ramps, hangars and shelters, engine trim pads, live-ordnance loading areas, fuels maintenance, firefighting capability, aircraft arresting systems, and other infrastructure requirements should also be provided to support mission generation.

MISSION GENERATION SUB-CAPABILITIES

Last Updated: 21 December 2015

The combat support Generate the Mission core capability is broken down into six main sub-capabilities dealing with mission elements. A mission element can range from manned/unmanned aircraft, nuclear weapons systems, and satellite launch vehicles, to applicable support/test equipment and vehicles required for mission generation.

Prepare Mission Element

These are the actions necessary to assess, repair, maintain, inspect, and ready the mission element to commence operations. This includes:

- **Assessing the status of the mission element:** Actions necessary to appraise overall mission element condition resulting from mission debrief, flight status record, and quality and safety inspections.

- **Maintaining and modifying the mission element:** Routine maintenance and modification actions required to prepare the mission element for the assigned mission. It includes, but is not limited to, corrosion control and replacement of consumable materiel and components.

- **Repairing the mission element:** Actions necessary to restore the damaged mission element.

Prepare Payload

This involves configuring and delivering personnel, equipment, or materiel for specific mission needs. This includes:

- **Delivery for assembly:** The delivery of mission-specific payload components for assembly.

- **Assembling the payload:** Combines the mission-specific components into the payload (completed units, kits, or assemblies) that are transported.

- **Distributing the payload for loading:** Transport and distribution of the mission-specific payload in the total quantity required by the date required.

Configure Mission Element

This is a broad capability that includes assembling, loading, fueling, and arming the mission element for a specific mission. It includes delivery of required mission preparation information to the platform. This includes:

- **Preparing the mission element layout and configuration:** The capability to physically configure the mission element to receive the type of payload required.
- **Fueling mission element:** Actions needed to fuel the mission element.
- **Uploading the payload:** Actions required to load the primary payload to accomplish the mission.
- **Configuring systems:** Actions required to ensure integration of mission element and payload, navigation elements, and parameters.
- **Verifying mission readiness:** The performance of mission systems checks and crosschecks.
- **Positioning for initiate and launch:** Actions required to place the mission element for immediate employment.

Launch Mission Element

This is the capability to perform final actions and hand off the system to the element operator to execute the mission. This can include initiating mission systems with the use of satellites. This includes:

- **Performing pre-mission checks:** Preparations for mission execution by mission operators or mission support crews. These actions verify readiness and mission-specific requirements, including verifying loading of the payload on the mission element and taking takeoff weather conditions into consideration.
- **Initiating mission systems:** Sets into motion the mission execution in accordance with mission-specific requirements.
- **Performing final checks:** Final inspection/validation of the mission element prior to mission launch/execution.

Recover Mission Element

This provides the capability to receive and assess status of the mission element. It also includes actions to extract personnel and damaged or disabled equipment under friendly control for return of personnel to duty and equipment to repair. Recovery of information (e.g., imagery and other mission data) collected by the platform during the mission also applies to this sub-capability. This includes:

- **Routine recovery:** Retrieval and restoration of mission elements during non-crisis situations or missions.

- **Crash recovery:** Retrieval and restoration of mission elements during a crash situation.

- **Offloading mission support element payload:** Actions required to download the primary mission payload when that payload was not designed to be expended or was simply not expended or when the next launch requires a change in configuration.

Prepare Launch and Recovery Apparatus

This provides the capability to inspect and analyze the mission element to determine if it can be repaired and estimate initial needs (parts, components, equipment, and personnel) to execute the repair. This includes:

- **Repairing launch and recovery apparatus:** Returns the recovery apparatus to its original or usable and functioning condition resulting from normal wear and tear or mission damage.

- **Restoring launch and recovery apparatus:** Returns the recovery apparatus to its original or usable and functioning condition to bring the launch and recovery apparatus back to mission status beyond normal maintenance.

- **Configuring launch and recovery apparatus:** Arranges, sets up, or shapes the recovery apparatus with a view to mission-specific recovery application or use.

- **Transporting and positioning launch and recovery apparatus:** Moves the launch and recovery apparatus to the location and prepares for use.

MISSION GENERATION CAPABILITY SOURCING

Last Updated: 21 December 2015

Combat support (CS) functional communities contain personnel, materiel, equipment, infrastructure, and information resources. These make up the essential elements required to generate missions and to support and sustain mission systems, components, equipment, and personnel in both peacetime and wartime environments.

CS global transportation management includes generation and regeneration of applicable mission elements to initiate or launch missions across the range of military operations to achieve the desired effects of the combatant commander. A mission element can range from manned or unmanned aircraft, nuclear weapon systems, satellite launch vehicles, and applicable support or test equipment and vehicles required for mission generation.

SUPPORT THE MISSION, FORCES, AND INFRASTRUCTURE

Last Updated: 21 December 2015

Supporting the mission, forces, and infrastructure encompasses supplying, distributing, and maintaining goods and services at operating locations. These actions are accomplished in order to maintain support for, assist, distribute support for, and supply the mission, forces, and infrastructure.

MAINTAIN SUPPORT FOR MISSION AND INFRASTRUCTURE

Last Updated: 21 December 2015

Key functions are needed to assure continued operating capability by providing right-sized support during the Employing the Force core process. The following sub-capabilities summarize the major functions the commander, Air Force forces (COMAFFOR), and Air Force forces (AFFOR) staff should ensure are prepared to support continued operations:

- **Infrastructure Planning:** Includes those actions taken to forecast existing capacity against authorized allowances, taking into consideration future mission or operational requirements leveraging principles of asset management to factor in total asset accountability when making resource-based decisions. The AFFOR A4 usually conducts operational planning for the COMAFFOR in this area.

- **Infrastructure Programming:** Those actions taken to validate requirements, determine quantities, forecast costs to construct and determine methods of accomplishing acquisition either in-house or by contracting methods. The AFFOR A4 usually conducts operational planning for the COMAFFOR in this area.

- **Infrastructure Design:** Includes applying standards to ensure maximum end user performance, energy efficiency, and ability to meet applicable laws and codes related to life, safety, health, and welfare. The AFFOR A4 usually conducts operational planning for the COMAFFOR in this area.

- **Infrastructure Construction:** Performed by military forces or through contract augmentation. The AFFOR A4 usually conducts operational planning for the COMAFFOR in this area.

- **Infrastructure Maintenance, Protection, and Recovery:** Includes operation, hardening, repair, and sustainment of facilities, infrastructure, and installations; structural and aircraft firefighting; chemical, biological, radiological and nuclear decontamination and recovery; airfield damage repair; and utility repairs. The AFFOR A4 usually conducts operational planning for the COMAFFOR in this area.

- **Environmental Compliance:** Ensures compliance with applicable US laws and regulations; international agreements; Department of Defense, Air Force and combatant command environmental policy; country-specific environmental compliance standards; foreign final governing standards; and the overseas environmental baseline guidance document.[1] The AFFOR A4 usually conducts operational planning for the COMAFFOR in this area.

[1] For further information, see DOD 4715.05-G, *Overseas Environmental Baseline Guidance Document*.

- **Light or Heavy Construction/Repair:** Performed by RED HORSE or through contract augmentation. The AFFOR A4 usually conducts operational planning for the COMAFFOR in this area.

- **Infrastructure Demolishing/Divesting:** The actual removal by demolition, disposal or reuse of an item from the Air Force real property inventory. The AFFOR A4 usually conducts operational planning for the COMAFFOR in this area.

- **Vehicle Management:** Repairs vehicle and support systems and their components. The AFFOR A4 usually conducts operational planning for the COMAFFOR in this area.

- **Air, Space, and Munitions Maintenance:** Sustains the air, space, and munitions force. The degree of maintenance depends on mission requirements, parts availability, transportation limitations, component reliability, workload agreements, facility requirements, frequency of tasks, and special training required. The AFFOR A4 usually conducts operational planning for the COMAFFOR in this area.

- **Communications Infrastructure:** Receives, stores, protects, processes, transports, and disseminates information. Communications activation involves building the infrastructure (including a satellite link to the global information grid, a network control center, and power). The AFFOR A6 usually conducts operational planning for the COMAFFOR in this area.

- **Armed Security Escort:** Provides armed overwatch and escort for missions going into non-secured areas within the base security zone, depending on the threat. The AFFOR A4 usually conducts operational planning for the COMAFFOR in this area.

ASSIST MISSION, FORCES, AND INFRASTRUCTURE

Last Updated: 21 December 2015

Assist mission, forces, and infrastructure sub-capabilities assist in mission generation, management, and day-to-day operations including:

- **Control airfield and airspace traffic:** Provides air traffic control and airfield management personnel to sustain operations support and monitoring of the flying environment. The Air Force forces (AFFOR) A3 usually conducts operational planning for the commander, Air Force forces (COMAFFOR), in this area with support from the AFFOR A6 and A4 for the required equipment and infrastructure.

- **Provide airfield weather services, mission execution forecasts, and staff weather operations:** Provides airfield weather services to include assessment of current and future environmental conditions in support of flying operations and resource protection, collection, and dissemination of near-real time weather observations, tailored mission execution forecasts, and situational awareness to decision makers at all levels within the command and control structure. The AFFOR A3 usually conducts operational planning for the COMAFFOR in this area.

- **Provide spectrum management:** Controls the electromagnetic spectrum to serve the needs of US, allied, and coalition forces. The AFFOR A6 and the Electronic Warfare Coordination Cell usually work together to conduct operational planning for the COMAFFOR in this area.

- **Operate information/communications networks and equipment:** Provides operation of information and communications networks and equipment for information superiority at the right place, time, and security level. The AFFOR A3, with support from the AFFOR A6, usually conducts operational planning for the COMAFFOR in this area.

- **Provide postal and official mail service:** Provides another avenue of communication to military and DOD personnel. The AFFOR A6 usually conducts operational planning for the COMAFFOR in this area.

- **Finance Air Force operations:** Provides in-garrison, forward deployed, and reachback decision support and financial services, meeting regulatory and statutory requirements for appropriated, nonappropriated, and working capital fund resources. The AFFOR comptroller on the special staff usually conducts operational planning for the COMAFFOR in this area.

- **Capture history:** Allows the Air Force to write objective, classified and unclassified periodic histories of a unit's mission accomplishment by collecting, organizing, analyzing, and interpreting primary source documents, supplemented by interviews and audiovisual materials when appropriate. The AFFOR historian on the special staff usually conducts operational planning for the COMAFFOR in this area.

- **Maintain law and order:** Provides security and protects combat-ready weapon systems from sabotage, espionage, subversion, and attack both in-garrison and at deployed locations. The AFFOR A4 usually conducts operational planning for the COMAFFOR in this area.

- **Shape the public information environment:** Provides communication advice and counsel to commanders on the impact of operations and activities within the public information realm. Shapes the global information environment by communicating truthful and useful information about Air Force operations to internal, domestic, and international audiences. The AFFOR public affairs officer on the special staff usually conducts operational planning for the COMAFFOR in this area.

- **Provide visual documentation:** Acquires, collects, preserves, and accesses visual information products to meet operational, informational, training, research, legal, historical, and administrative needs. The AFFOR public affairs staff usually conducts operational planning for the COMAFFOR in this area.

- **Provide mishap prevention:** Provides a safe environment for all personnel and equipment to ensure mission accomplishment. The AFFOR safety officer on the special staff usually conducts operational planning for the COMAFFOR in this area.

- **Capture lessons learned:** Observations of both individual and organization behaviors, attitudes, and processes that, when validated and resolved, result in an improvement in military operations or activities at the strategic, operational, or tactical level. Over the long-term, internalizing individual or organizational changes based on these observations can enhance readiness and improve operational efficiency and effectiveness. The AFFOR A9 usually conducts operational planning for the COMAFFOR in this area.

- **Provide specialized analytical support:** Includes performing studies, analyses, and assessments needed by senior-level decision-makers for strategic planning; operational and developmental planning; requirements assessments, modernization and recapitalization of systems and programs; and the planning, programming, budgeting, and execution decision processes. The AFFOR A9 usually conducts operational planning for the COMAFFOR in this area.

- **Maintain operating location organization:** Includes actions needed to determine, research, request, and process authorization and organization changes. The AFFOR A1 usually conducts operational planning for the COMAFFOR in this area.

- **Execute and maintain agreements:** Provides capability to the warfighter to gain and control access to bases and overflight rights, stage bases, use host nation assets, and acquire or provide support to allies. The AFFOR staff judge advocate on the special staff and the A4 usually conduct operational planning for the COMAFFOR in this area.

- **Build partner capacity:** Enables combat support forces to engage partner nations and build their aviation, industrial, public works, or municipal enterprise. The COMAFFOR

should designate a lead agent to conduct this planning and oversight as required.

- **Provide legal services:** Includes advice to commanders and personnel at all levels, and in all locations, on matters ranging from disciplinary issues to operational concerns. The AFFOR staff judge advocate on the special staff usually conducts operational planning for the COMAFFOR in this area.

- **Create/maintain and dispose of official records:** Includes all actions necessary to plan, create, maintain, store, retrieve, transmit, and destroy official government records (electronic and physical) to provide proper documentation, enhance security, and support all aspects of the mission. The AFFOR A6 usually conducts operational planning for the COMAFFOR in this area.

- **Secure classified and unclassified controlled information:** Includes the Air Force information security program, ensuring unit personnel know and understand their role in protecting classified and controlled unclassified information against unauthorized disclosure. The AFFOR information protection directorate usually conducts operational planning for the COMAFFOR in this area.

- **Provide investigative and inspection services:** Allows the Air Force to assess the readiness, discipline, efficiency, and economy of the Service. The inspector general assigned to support the COMAFFOR usually conducts operational planning for the COMAFFOR in this area.

MAINTAIN FORCES

Last Updated: 21 December 2015

Maintain Forces is achieved through the use of key functional communities described below:

- **Feeding operations (food service):** Procures, receives, inspects, stores, sanitizes, prepares, serves, and disposes of food items. The Air Force forces (AFFOR) A1 usually conducts the operational planning for the commander, Air Force forces (COMAFFOR), in this area with support from the AFFOR A4 for the required infrastructure.

- **Lodgment of forces (lodging and laundry operations):** Provides temporary lodging for Airmen and authorized personnel at in-garrison or deployed locations. The AFFOR A1 usually conducts operational planning for the COMAFFOR in this area with support from the AFFOR A4 for the required infrastructure.

- **Keeping Airmen fit to fight (fitness):** Provides programs, facilities, and equipment necessary to support fitness activities and maintain force fitness. The AFFOR A1 usually conducts operational planning for the COMAFFOR in this area with support from the AFFOR A4 for the required infrastructure.

- **Support and track personnel:** Helps track and account for Air Force personnel and personnel from other Services as required. The AFFOR A1 usually conducts operational planning for the COMAFFOR in this area.

- **Airmen regeneration (recreation):** Procures entertainment and creates alternative diversions from work stress and family separation anxiety thereby enhancing the resiliency of Airmen. The AFFOR A1 usually conducts operational planning for the COMAFFOR in this area.

- **Developing and connecting Airmen to the outside world (learning resource centers):** Provides for intellectual pursuits for both continued professional development and mental diversions from the daily realities Airmen face. The AFFOR A1 usually conducts operational planning for the COMAFFOR in this area.

- **Host official functions (protocol):** Plans, schedules, coordinates, and conducts distinguished visitor visits and special events. The AFFOR A1 usually conducts operational planning for the COMAFFOR in this area.

- **Respond to sexual assault:** Resides in the sexual assault response coordinator; develops an installation-wide sexual assault prevention and response program, which includes victim advocacy, prevention, training, outreach, and means of risk reduction. The AFFOR A1 usually conducts operational planning for the COMAFFOR in this area.

- **Respond to equal opportunity (EO) issues:** Resides with the EO officer at the installation; develops an installation-wide equal opportunity program for both military and civilians on the installation for EO prevention, training, outreach, and means for risk reduction. The AFFOR A1 usually conducts operational planning for the COMAFFOR in this area.

- **Airman and family reunification:** Provides the process through which Airmen return from deployment to their home, social, and work environment. The AFFOR A1 usually conducts operational planning for the COMAFFOR in this area.

- **Ensure free exercise of religion:** Delivered by the Air Force Chaplain Corps. Provides spiritual care and the opportunity for Airmen, their families, and other authorized personnel to freely exercise their religious expression. The AFFOR staff chaplain on the special staff conducts operational planning for the COMAFFOR in this area.

- **Provide medical/health services:** Provides direct health services support for Air Force forces, en route casualty support for joint forces, and health care for eligible beneficiaries through the Air Force Medical Service. The AFFOR surgeon general on the special staff usually conducts operational planning for the COMAFFOR in this area.

- **Provide Legal Support:** Enables personnel to remain mission-focused by providing legal support on a variety of personal civil legal matters; supports commanders by administering the military justice process to foster good order and discipline of the force. The AFFOR staff judge advocate on the special staff usually conducts operational planning for the COMAFFOR in this area.

- **Mortuary affairs:** Entails all operations to collect, recover, store, prepare, ship, and inter, under extreme conditions, remains of fallen personnel. The AFFOR A1 usually conducts operational planning for the COMAFFOR in this area.

DISTRIBUTION SUPPORT

Last Updated: 21 December 2015

Distribution support provides all actions needed to transport and deliver personnel, equipment, and commodities, as well as blood and medical supplies to users in mission support operations within the confines of an operating location.

- **Package and containerize:** Involves visibility of packages and the time it takes to achieve operational readiness from capabilities contained within those packages. The Air Force forces (AFFOR) A4 usually conducts operational planning for the commander, Air Force forces (COMAFFOR), in this area.

- **Plan and manifest:** Revolves around determining the appropriate shipment method based on the time-phased force deployment document and the required delivery date. The AFFOR A4 usually conducts operational planning for the COMAFFOR in this area.

- **Load, control, offload, and deliver:** Involves tracking systems that are linked to a support operation center to provide real-time information concerning materiel awaiting shipment, in-transit tracking, and materiel arrival at the final destination. The AFFOR A4 usually conducts operational planning for the COMAFFOR in this area.

SUPPLY MISSION, FORCES, AND INFRASTRUCTURE

Last Updated: 21 December 2015

Supply the mission, forces, and infrastructure includes actions needed to order, receive, store, and issue all materiel needed for servicing and maintaining resources and capabilities both in garrison and when deployed.

- **Plan for requirements:** Analyzes past demand, forecasts materiel needed to support future programs, and anticipates materiel and parts failures to validate and plan for requirements. The Air Force forces (AFFOR) A4 usually conducts operational planning for the commander, Air Force forces (COMAFFOR), in this area.

- **Receive parts/process demand/order/store/issue materiel:** Includes all actions required to effectively manage an inventory so that the right capability is delivered at the right time and in the most cost effective and expedient manner to the end-user. The AFFOR A4 usually conducts operational planning for the COMAFFOR in this area.

- **Reutilization/disposal:** Entails final removal or reuse of an Air Force inventory item. The AFFOR A4 usually conducts operational planning for the COMAFFOR in this area.

SUSTAIN THE MISSION, FORCES, AND INFRASTRUCTURE

Last Updated: 21 December 2015

Sustaining the mission, forces, and infrastructure ensures combat support (CS) is maintained for the duration of operations, maximizing the use of reachback, to include the industrial base. As with supporting the mission, forces, and infrastructure, the expanded and extensive lists of functions in the Sustainment Resupply Distribution and Delivery and Total Asset Visibility discussions provide an overview of the diverse aspects of CS that support the Service during the Sustaining the Force core process. All of the CS components within the Air Force forces staff conduct the sustainment planning and tracking for the commander, Air Force forces.

SUSTAINMENT COMMAND AND CONTROL

Last Updated: 21 December 2015

The Air Force sustainment construct depends on reachback, real-time visibility, and control of all resources to reduce the forward footprint and enable more airlift to be dedicated to moving combat power. As a result, rapid resupply and retrograde operations are necessary to sustain forces and maintain a ready flow of repairables to sources of repair. Reachback for sustainment of equipment, information, materiel, and personnel requires robust, long-haul communication links to identify, coordinate, and monitor requirements. There are many locations for combat support reachback. They include component major commands, component numbered Air Forces, and Air Staff agencies as well as the various functional communities, field operating agencies, and centers.

ESTABLISHING A SUSTAINMENT INFRASTRUCTURE

Last Updated: 21 December 2015

Sustainment should anticipate combat support (CS) challenges before they affect operations. Critical forces and capabilities are identified and evaluated against risks. Findings highlight CS deficiencies with associated risks and are included in the joint force commander's (JFC's) readiness assessment reports. The deficiencies are then considered as candidate issues for further analysis in capability assessments.

The logistics sustainability assessment (LSA) is a product of sustainment planning. It provides an assessment and action plan to improve key CS capabilities required to execute a JFC's planned operation. The LSA should be accomplished for operations plans (OPLANS), contingency plans, and any planned operation the JFC deems necessary. The assessment spans the plan duration and addresses the joint capability areas defined in the logistics supplement to the joint strategic capabilities plan. The A4 or the A5 on the Air Force forces staff usually accomplishes the LSA for the commander, Air Force forces.

REPAIR AND MAINTAIN MATERIEL AND EQUIPMENT

Last Updated: 21 December 2015

Repair and maintain materiel and equipment addresses the assessment, repair, maintenance, and modification of materiel and equipment. The focus is primarily on the intermediate and depot levels of maintenance. By acquiring and using the necessary technology and equipment, combat support (CS) reduces buildup time, increases rapid response capability, and reduces footprints. It is a continuing process performed by functional communities, such as science and technology, acquisitions, and materiel management. CS forces should aggressively seek and apply innovation and creativity. They should also seek proven methods, materiel, and equipment from the commercial market to satisfy their requirements. The A4 on the Air Force forces staff conducts operational planning and oversight for the commander, Air Force forces, in this area.

SUSTAINMENT RESUPPLY DISTRIBUTION AND DELIVERY

Last Updated: 21 December 2015

Sustainment and resupply provide the capability to determine, forecast, catalog, standardize, and validate requirements as well as identify actions to receive and fulfill requisitions with the focus on reachback requirements. The A4 on the Air Force forces staff conducts operational planning and oversight for the commander, Air Force forces, in this area. The following sub-capabilities support this:

- **Forecast requirements:** Those actions taken to identify demand based on past demands, future programs, anticipated failures, and actual inventory.
- **Receive requisitions:** Actions performed to take delivery of the request for items of supply/commodity.
- **Control:** Those actions taken to evaluate stock levels, track and account for inventory, and source to meet needs for an item and priority of the requestor before filling a requisition.
- **Fulfill requisitions:** Includes sequencing, identifying a source, and assuring the proper condition of an asset through inspection.
- **Stock/storage:** The capability to store items and to receive new materiel.
- **Determine resupply requirements:** Those actions taken to validate requirements, determine quantities, determine disposal actions, and laterally fill resupply requirements.
- **Physical disposal**: Process the actual removal or reuse of an item from the Air Force inventory.
- **Analyze transport requirements:** Analyze the capability to determine and predict requirements for transport.
- **Plan delivery**: Sequence, coordinate, and prioritize requirements for support and the available transportation capability.

Sustainment, distribution, and delivery provide the robust transportation capability that facilitates the movement and deployment of forces as well as their reception, sustainment, redeployment, or recovery to an in-garrison location.

TOTAL ASSET VISIBILITY

Last Updated: 21 December 2015

Total asset visibility focuses on capturing information on assets being repaired, moved, or stored (purchasing and supply chain management), as well as passenger and patient movement status. The A4 on the Air Force forces (AFFOR) staff conducts operational planning and oversight for the commander, Air Force forces (COMAFFOR), in this area. Its sub-capabilities include:

- **Track personnel and equipment:** Provides real-time visibility of personnel, equipment, and materiel (excludes assets in-transit).

- **Provide in-transit visibility:** Those actions taken to track individual cargo, personnel, and medical patients while in transit.

Total asset visibility also focuses on capturing information on facility and infrastructure assets being repaired and sustained. The A4 on the AFFOR staff conducts operational planning and oversight for the COMAFFOR in this area. Sub-capabilities include:

- **Prioritize asset investment based on mission-critical worst-first approach:** The capability to provide real-time visibility of facilities and infrastructure and invest in those priorities that address mission critical/worst-first requirements. The focus is on making more efficient use of existing assets before building additional facilities. This process focuses sustainment efforts on important assets in good shape while investing restoration and modernization funds on either mission-critical assets that require modernization to extend facility use beyond expected life-span or on assets that do not meet functional mission requirements.

- **Forecast predictive operations and maintenance requirements:** Those actions taken to track facility and infrastructure operations with emphasis given to maintaining assets to ensure they reach expected life-cycle targets. Reduce the risk to infrastructure investments and maximize installation support and infrastructure.

SUSTAINMENT OF THE TOTAL WORKFORCE

Last Updated: 21 December 2015

Sustaining the total workforce ensures the Air Force's workforce (military, civilian, and contractor) is fully prepared to meet all day-to-day workload requirements and that executable plans are in place to support surge needs as contingency situations arise. The A1 on the Air Force forces staff conducts operational planning and oversight for the commander, Air Force forces, in this area.

APPENDIX: FUNCTIONAL COMMUNITIES

Last Updated: 21 December 2015

FUNCTIONAL	ROLE
Acquisition	Plans for, develops, and procures everything from initial spare parts to complete weapons and support systems, including combat support, based on user requirements. Provides the right resources at the right time during the readiness phase and focuses on reducing cycle times to render acquisition more responsive to a rapidly changing security environment. Participates in initial beddown planning.
Airfield Operations	Airfield operations are comprised of two functional competencies; air traffic control and airfield management operations. Air traffic control is a functional capability required throughout the range of military operations, and is a necessary capability both at fixed bases and tactical airfields. Airfield management enables both the projection and sustainment of aviation capability. Airfield management is responsible for the overall management of an airfield to provide a safe, efficient, and effective airfield environment for aircraft operations.
Air Force Office of Special Investigations	Conducts criminal investigations and counterintelligence activities to enhance force protection by identifying and mitigating the threat "outside the wire" from terrorists, foreign intelligence services, and other criminal and insurgent elements. Gathers information regarding existing or emerging threats through the use of human sources and a vast network of police and security service contacts around the globe. The Air Force single point of contact with federal, state, local, and foreign national law enforcement, counterintelligence, and security agencies.
Analyses, Assessments, and Lessons Learned	Provides specialized analytic support for strategic planning, operational and developmental planning, requirements assessments, modernization and recapitalization of systems and programs, and the planning, programming, budgeting, and execution decision processes.
Chaplain Corps	Provides for all components of religious and spiritual care across the range of military operations. This is accomplished through religious observances, providing pastoral care, and advising leadership on spiritual, ethical, moral, morale, and religious accommodation issues.

Civil Engineer	Provides engineering, housing, energy, real property, construction, drilling, comprehensive planning, environmental management, and air insertion engineering required to establish, operate, and maintain installations, facilities, and utilities that enable persistent and effective combat operations. Responsible for the installation emergency management program using an all-hazards approach to prepare for, respond to, recover from, and mitigate the effects of hazards and threats. Delivers a broad range of emergency services capabilities including explosive ordnance disposal (including criminal and terrorist improvised explosive devices and high-yield explosives); fire protection; fire emergency services, emergency response; major accident response and recovery; and mitigation and recovery from the effects of weapons of mass destruction (including chemical, biological, radiological, and nuclear weapons), non-combat emergencies, hazardous materials response, and terrorist incidents.
Communications and Information	Responsible for the enterprise management, situational awareness, network defense, and command and control of all Air Force terrestrial, space, and airborne networks in support of air, space, and cyberspace capabilities across the range of military operations. Provides combat-ready forces and communications and information infrastructure and expertise enabling sustained combat operations through cyberspace and the integration of those operations with air and space operations worldwide.
Contracting	Provides contingency contracting support to operations and support activities by establishing contracts and agreements to acquire mission-essential supplies and services throughout the initial deployment, buildup, sustainment, termination, and redeployment phases.
Distribution	Distribution personnel arrange for end-to-end transportation of passengers, equipment and materiel in support of deployment, redeployment, sustainment and retrograde. Distribution personnel provide a wide range of transportation services, including packing and intermodal containerization of materiel, movement planning, preparation for and movement of personnel and cargo (including required customs processes), receipt/delivery of inbound personnel and cargo, and in-transit visibility.
Financial Management (FM) and Comptroller	Provides effective stewardship of the public purse and robust decision support to commanders at all levels. At the onset of any operation, FM provides disbursing and other financial services. The FM/contracting team is the commander's link to the local economy for procurement and other cash operations. FM forces are tailored to meet the commander's needs throughout the lifecycle of the operation. They may mobilize with unit funds or manage funds provided through an Air Force component command, combatant command, sister Service or other agency. FM may budget and account for funds specifically appropriated for the operation, or document expenditures for possible reimbursement. FM provides financial analysis, cost, decision support, financial services and disbursing through forces in theater, financial systems, and reachback.

Force Support	Ensures warfighting capability by providing manpower and personnel programs, life-sustaining and essential services, and quality-of-life programs to support forces across the range of military operations. Provides total force accountability and personnel management to integrate the regular, Guard, Reserve, and civilians to meet personnel resource requirements. Provides casualty reporting capability to ensure timely and humane notification to next of kin. Provides food service, mortuary affairs, lodging, fitness, protocol, retail sales and services, laundry services, and recreational opportunities. Responsible for manpower management, organization designations, performance management. Provides education and training, alternative dispute resolution, complaint processing, unit climate assessments and affirmative employment programs; pre-commissioning programs, professional military education, professional continuing education, higher education, and transition and career assistance. Ensures the Air Force's commitment to eliminate sexual assaults through awareness and prevention training, education, victim advocacy, response, reporting, and accountability. Provides military and family support capability through programs for deployed members and families that support Airman resiliency and reintegration.
Health Services	Provides force health protection (FHP), which is a "total life cycle" health support system that addresses all health-related threats affecting the combat force. The three primary focal points of FHP are a healthy fit force, casualty prevention, and casualty care and management.
Historian	Provides Air Force leadership at all levels with accurate and well-analyzed historical information and documentation of key activities including collection, preservation, evaluation, and interpretation of current operational data. These data are used to enhance the combat capability of the Air Force.
Judge Advocate	Provides legal advice to commanders and other personnel on all areas of combat support, including command relations; military justice; personnel issues; fiscal law; contracting actions; ethics; environmental law; claims; SOFAs; the law of armed conflict; international agreements; rule of law; and specialized legal support in multinational, civil-military, and combat operations. Provides legal services, including legal assistance, that maximize the legal readiness of the force on both organizational and personal levels.
Logistics Planning	Provides expeditionary site planning, management of war reserve materiel, and implementation of efficient combat support across the range of military operations. Provides the planning component for deploying to, reception of forces in, sustaining, and redeploying from an operational area.
Maintenance	Maintains, repairs, and supports multiple weapon systems and associated equipment, and support equipment. Provides organizational, intermediate, and depot-level maintenance both on the flightline and in repair facilities. Also includes battle damage repair and crash and recovery operations when required.

Materiel Management	Materiel Management supports the mission with the following capabilities; brings expertise as accountable and responsible personnel for all classes of supplies. Provides assistance to commanders and equipment custodians in the proper transfer and accounting of assigned equipment assets. Procures, receives, stores, issues, and accounts for assigned readiness spares assets. Monitors, controls, and reports status of reparable assets. Acts as the primary liaison between the unit and supporting logistics support centers. It is an enabling capability that supports sustainment of Airmen, weapons systems, and facilities to provide responsive, consistent, and reliable support to the warfighter during peacetime and war.
Munitions Management	Procures, requisitions, manages, allocates, and maintains munitions to include storage, maintenance, assembly/disassembly, staging, delivery, protection, and reconstitution efforts.
Postal Services	Provides mail services around the world in partnership with US Transportation Command and the United States Postal Service.
Public Affairs	Provides communication advice and support to commanders at all levels. Plans, conducts, synchronizes, integrates, and evaluates communication planning, command information, media operations, community engagement, visual information, counterpropaganda, Air Force band and security and policy review activities to gain and maintain local, national, and international support for military operations and communicates U.S. resolve in a manner that provides global influence and deterrence.
Safety	Promotes a safe environment for air, space, and cyberspace forces to live and work, resulting in the preservation of vital resources. Assists with implementation and integration of risk management into all operations and missions. Focuses on mishap prevention and proactive safety in all mission sets to preserve combat capability.
Science and Technology	Includes basic research, applied research, and advanced technology development. Basic research includes all scientific study and experimentation directed toward increasing fundamental knowledge and understanding in those fields of the physical, engineering, environmental, and life sciences related to long-term national security needs. Applied research translates promising basic research into solutions for broadly defined military needs and includes studies, investigations, and non-system specific technology efforts. Advanced technology development includes development of subsystems and components and efforts to integrate subsystems and components into system prototypes for field experiments and tests in a simulated environment. For the purpose of combat support, science and technology are focused on fielding, protecting, supporting, and sustaining Air Force forces across the range of military operations.
Security Forces	Contributes to the overall effort by protecting and securing operationally critical installations, personnel, facilities, and systems. Security Force capabilities include: Area security operations, base security operations, law and order, combat arms, military working dogs, and nuclear security operations.

Test and Evaluation (T&E)	Ensures weapons systems are operationally effective and suitable; incorporates lessons learned during T&E of a new system to increase its agility; takes a rapid response process project, developed in response to a critical wartime need, and makes sure it will work as designed; and readies an immature weapons system for immediate wartime deployment, making critical decisions as to the system's ability to perform its mission sufficiently well to warrant deployment without jeopardizing irreplaceable resources or delaying the system's initial operating capability.
Weather Services	Provides timely and accurate environmental data and information, including climatological assessments and space and atmospheric weather, integral to the decision process and timing for employing forces and planning and conducting air, ground, and space launch operations.